We're in charge of batteries

renata batteries

Battery Holders: Surface Mounting Technology

Renata Part*	Model	For Use With Renata Cell	Dimensions (mm) A	B	C	D	E	F	Weight (g)
701132	SMTU357-LF	357 (SR44W)	23.30	19.90	11.60	12.00	7.55	20.70	0.85
701114	SMTU1220-LF	CR1220	23.70	20.30	12.50	12.70	4.80	21.10	0.80
701115	SMTU1225-LF	CR1225	23.70	20.30	12.50	12.70	4.80	21.10	0.70
701130	SMTU1632-LF	CR1632	27.70	24.30	16.00	14.50	5.40	25.10	0.80
701116	SMTU2032-LF	CR2032	32.00	28.50	20.00	16.10	5.40	29.40	0.95
701117	SMTU2430-LF	CR2430	36.40	33.00	24.50	16.10	4.90	33.80	1.05
701118**	SMTU2450N-LF	CR2450N	36.40	33.00	24.50	16.10	7.50	33.80	1.45
701119	SMTU2477N-LF	CR2477N	36.40	33.00	24.50	16.10	10.30	33.80	1.65
701113	SM2X2016-LF	CR2016	32.00	28.50	20.00	16.10	5.40	29.40	0.95

*) Industrial bulk packaging **) Not suitable for CR2450HT

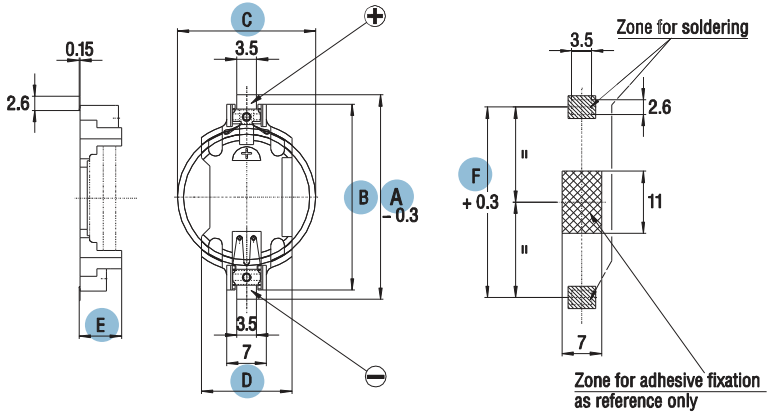

side view top view layout top view

Tape and Reel Packaging
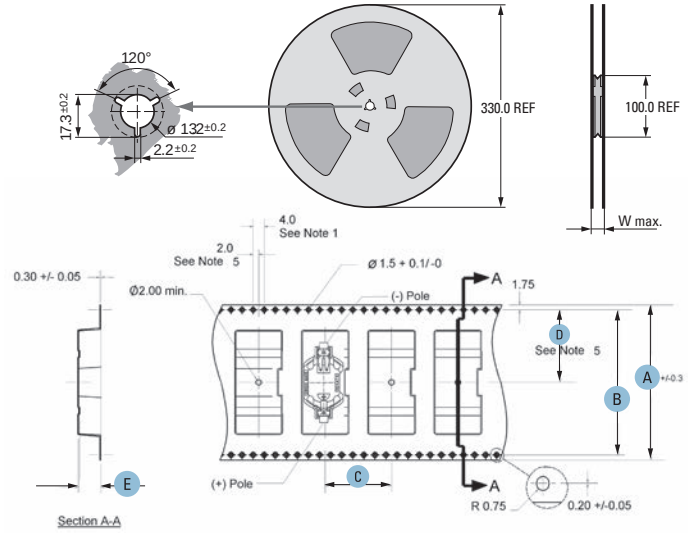
Renata Part	Model	Quantity Per Reel	Dimensions (mm) A	B	C	D	E
702450	SMTU1220-LF.TR	750 pieces	44.00	40.40	16.00	20.20	5.70
701230	SMTU1225-LF.TR	750 pieces	44.00	40.40	16.00	20.20	5.70
701231	SMTU1632-LF.TR	520 pieces	44.00	40.40	20.00	20.20	6.10
701232	SMTU2032-LF.TR	485 pieces	44.00	40.40	24.00	20.20	6.00
701233	SMTU2430-LF.TR	490 pieces	56.00	52.40	24.00	26.20	5.70
701234	SMTU2450N-LF.TR	350 pieces	56.00	52.40	24.00	26.20	8.20
701235	SMTU2477N-LF.TR	250 pieces	56.00	52.40	24.00	26.20	10.80
701236	SM2X2016-LF.TR	485 pieces	44.00	40.40	24.00	20.20	6.00